*** FOR QUALITY CONTROL PURPOSES ONLY *** NOT TO BE DISTRIBUTED EXTERNALLY

QC REQUIREMENT - BOWING CHECK

15901

PUT TOGETHER 2 x 17FT LONG PIECES
MEASURE GAP AT CENTRE OR END AS INDICATED

TEST 1

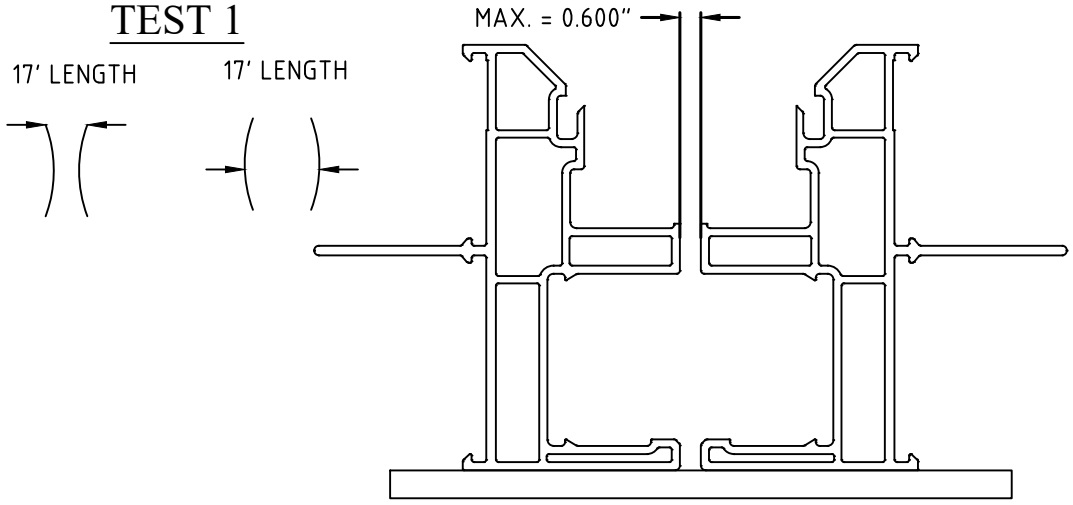

MEASURE GAP AT CENTRE OR END OF PROFILES

TEST 2

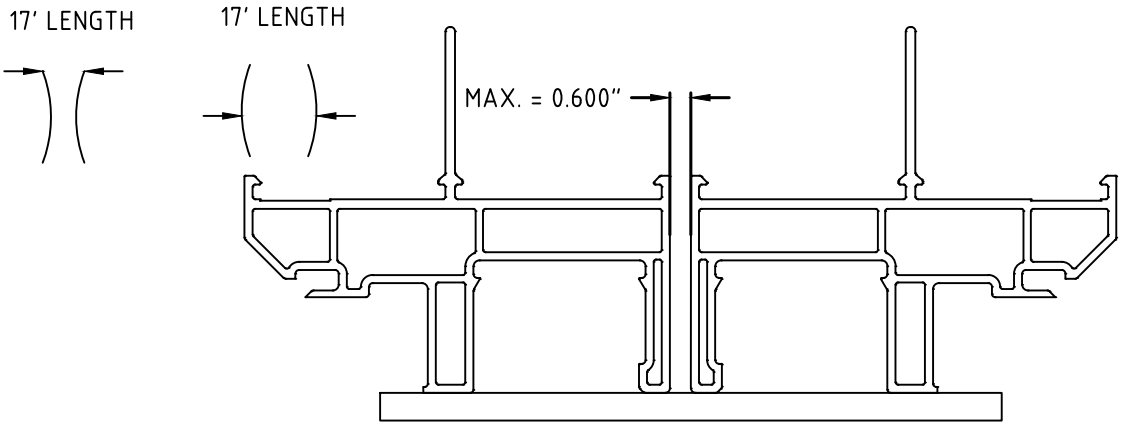

MEASURE GAP AT CENTRE OR END OF PROFILES

QUALITY CONTROL PRINT

VISION PROFILE EXTRUSIONS

This document and the information contained is owned by and proprietary to Vision Profile Extrusions Ltd. By receipt hereof, the holder agrees not to use the information, disclose it to any third parties nor reproduce this document without the prior written consent of Vision Profile Extrusions Ltd, and agrees to return this document forthwith upon request.

PART: SH / SS WINDOW FRAME (VISION)				AREA: ##### in²	TOOL NO.: 15901
EXTRUDER SIZE (mm):	HEAD ADAPTOR: 1	SHEET: pf	SCALE: 1 : 1	LBS/FT: #####	DATE: FEB-24-2026
TESTING OUTPUT (in/min): # - ##	MODULAR:	REV: A1	DRAWN BY: DM	Lbs/M': #####	DWG NO.: 15901C